Journal of Physics:
Conference Series

PURPOSE-LED PUBLISHING™

PAPER • OPEN ACCESS

Thermo-economic analysis of the potential for electricity generation by integrating a Rankine cycle with municipal solid waste incineration

To cite this article: L Sánchez Ascanio *et al* 2022 *J. Phys.: Conf. Ser.* **2163** 012007

View the article online for updates and enhancements.

You may also like

- The influence of protective coatings on the magnetic properties of acicular iron nanoparticles
Raúl Pozas, Manuel Ocaña, M Puerto Morales et al.
- Applications of the Poisson and diffusion equations to materials science
C Nolasco, N J Jácome and N A Hurtado-Lugo
- Improving Co distribution in acicular Fe–Co nanoparticles and its effect on their magnetic properties
Raúl Pozas, Manuel Ocaña, M Puerto Morales et al.

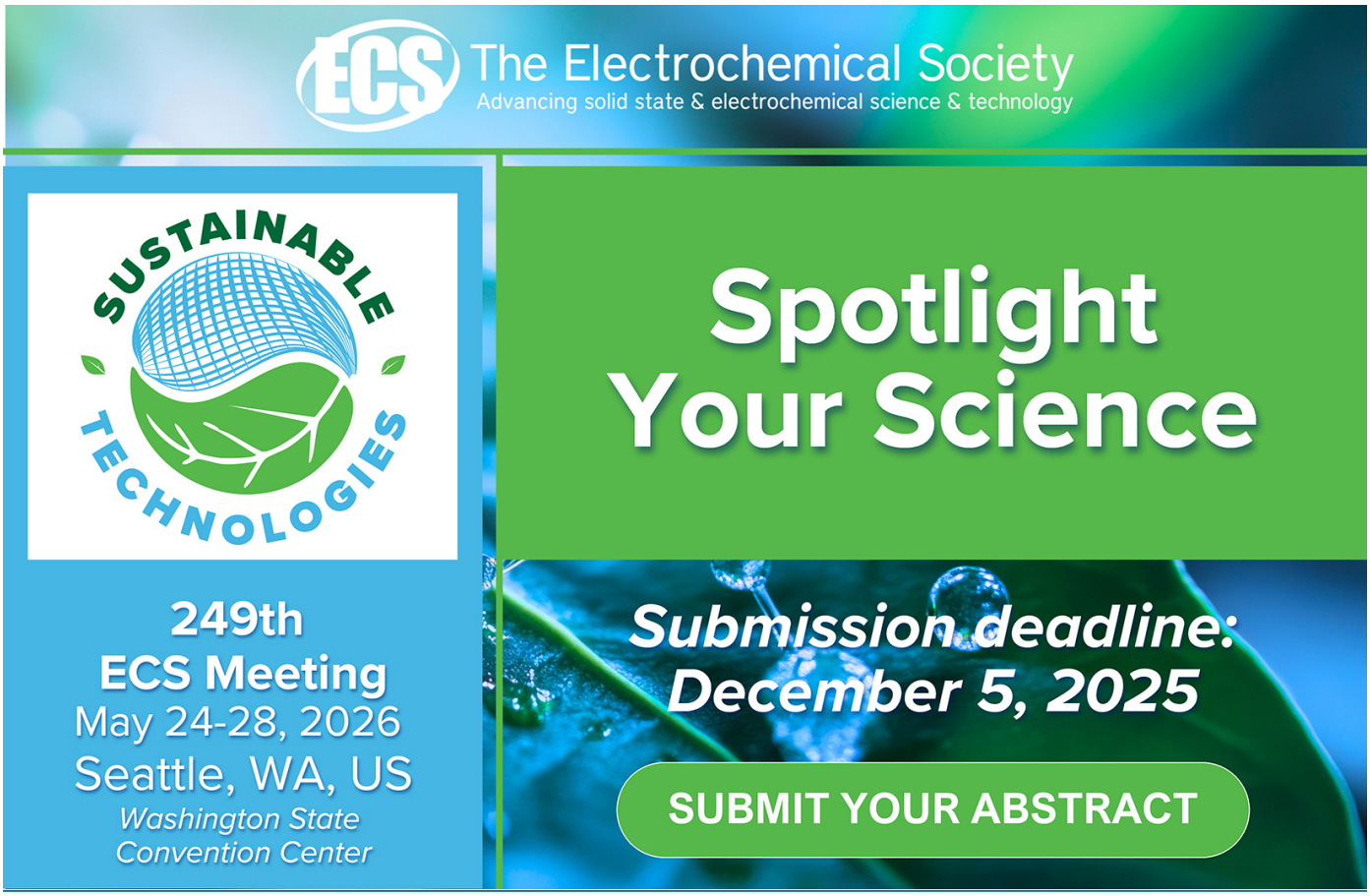

This content was downloaded from IP address 8.243.64.131 on 18/11/2025 at 20:18

Thermo-economic analysis of the potential for electricity generation by integrating a Rankine cycle with municipal solid waste incineration

L Sánchez Ascanio[1], **K A Torres Correa**[1], **and D A Quintero-Coronel**[1]
[1] Grupo de Investigación en Tecnología y Desarrollo en Ingeniería, Universidad Francisco de Paula Santander, Seccional Ocaña, Colombia

E-mail: lsancheza@ufpso.edu.co

Abstract. Municipal Solid Wastes generated by human activities increase as the population grows; in Ocaña city, Norte de Santander, Colombia, these wastes reach a monthly production of about 2660 tons, made up of 65.6% waste food, 15.3% plastics, 9.9% toilet paper, 3.6% paperboard, 2.6% textile residues, 1.6% paper, 0.8% wood wastes, and 0.1% rubber. This work estimates the energy potential from municipal solid wastes for electricity generation and their production costs. A multicriteria decision analysis allowed selecting the best technology for the wastes processing based on their energy content. For the evaluated criteria, the incineration process showed priority. A model developed in the engineering equation solver software allowed calculating the electrical energy potential by integrating the incineration process with a Rankine cycle. By implementing a thermo-economic assessment, the electricity generation costs were determined, where the inversion, installation, operation, and maintenance costs were considered. 1974 KW of electrical power with generation costs of $300/KWh and a payback period of 2.5 years show the feasibility of this process.

1. Introduction

Municipal solid wastes (MSW) derived from human activities increased with the increase of the population. These wastes are mainly generated in residences, commercial centers, and institutions [1]. This study evaluates the energy potential of MSW generated in Ocaña, Colombia, to obtain electrical energy through a Rankine cycle. Different methods for processing and disposal of municipal solid waste provide routes to obtain energy value from wastes. Thermochemical routes include incineration, gasification, pyrolysis, and plasma processes [2].

Different authors have developed research that evaluate the energy production from MSW through diverse technologies. Shahnazari, *et al.* [2] evaluated the best technology for the thermochemical processing of the MSW. Siddiqi, *et al.* [3] estimated the power generation from MSW incineration coupled to a Rankine cycle for the wastes generated in Pakistan.

The study aims to describe a structured procedure to analyze the technologies for the thermochemical conversion of MSW. Here, we apply an accurate method to select the more suitable route for the thermochemical conversion of MSW followed by a thermo-economic analysis, estimating the power generation cost and the economic sustainability of the process. Results obtained in this research insights the behavior of MSW as a feedstock for electrical energy generation.

Content from this work may be used under the terms of the Creative Commons Attribution 3.0 licence. Any further distribution of this work must maintain attribution to the author(s) and the title of the work, journal citation and DOI.
Published under licence by IOP Publishing Ltd

2. Methods

MSW can be organics or inorganics; the former, being biodegradable, taking a short time to decompose, while the latter do not disintegrate or require more time. This study analyses the MSW produced in Ocaña, Colombia, as shown in Table 1 [4].

Table 1. Municipal solid waste quantity and type generated in Ocaña, Colombia [4].

MSW	t/day	%	MSW	t/day	%
Food	37.80	60.39	Textiles	1.49	2.38
Plastics	8.81	14.08	Paper	0.91	1.45
Toilet paper	5.75	9.19	Wood	0.75	1.20
Cardboard	2.17	3.47	Others*	3.23	5.16
Glass	1.68	2.68	Total	62.59	100.00

* It represents the amount of non-classified waste in the study, determined as the difference between the total reported and the classified waste.

2.1. Energy potential of municipal solid waste

To estimate the energy potential of MSW, we consider the proximate and ultimate analysis [5,6] as a measure of the energy contained in these wastes. Equation (1) allows calculating the higher heating value (HHV) of the MSW by considering the Channiwala and Parikh correlations [7].

$$\mathrm{HHV} = 0.3491\mathrm{C} + 1.1783\mathrm{H} + 0.1005\mathrm{S} - 0.1034\mathrm{O} - 0.0151\mathrm{N} - 0.0211\mathrm{A}, \quad (1)$$

where C, H, O, N, S, A represent the mass percentage of carbon, hydrogen, oxygen, nitrogen, sulphur, and ash, on a dry basis for the MSW. In Equation (1), the HHV is in MJ kg^{-1}.

On the other hand, to estimate the lower heating value (LHV) of the MSW, we consider their stoichiometric combustion with air, as defined in Equation (2). This reaction allows calculating the water formed in the MSW, which represents an input variable in Equation (3) [8].

$$\mathrm{CH_xO_yN_zS_p} + \mathrm{wH_2O} + \mathrm{a_{th}(O_2 + 3.76N_2)} \rightarrow \mathrm{n_xCO_2} + \mathrm{n_xH_2O} + \mathrm{n_xN_2} + \mathrm{n_xSO_2}, \quad (2)$$

$$\mathrm{LHV} = \mathrm{HHV} - \mathrm{m_{H_2O}} \cdot \mathrm{h_{fg-H_2O}}. \quad (3)$$

The subscripts x, y, z, and p represent the number of hydrogens, oxygen, nitrogen, and sulphur atoms, respectively, estimated from [9]. Likewise, w corresponds to number of mols of water in the MSW, and $\mathrm{a_{th}}$ is the stoichiometric molar air. Similarly, $\mathrm{n_x}$ indicates the numbers of mols formed of the respective component. On the other hand, $\mathrm{m_{H_2O}}$ y $\mathrm{h_{fg-H_2O}}$ correspond to the mass of water in the products per unit mass of MSW and the enthalpy of vaporization of water, respectively.

2.2. Analytical hierarchy method for the technology selection

Figure 1 shows the hierarchical structure used for selecting the suitable technology for the thermochemical conversion of the MSW used in this study. The first level in Figure 1 represents the purpose of the study. The second level corresponds to the general criteria, which support the sub-criteria in the third level. The fourth level, on the other hand, indicates the thermochemical conversion technologies studied. The Saaty's scale [10] allowed developing the pairwise comparisons. Saaty's scale uses weighting factors to determine the significance of the criteria; in [2] defines the inconsistency ratio.

2.3. Combustion of municipal solid waste

To analyze the combustion of solid waste, a 5% moisture content of the MSW and a drying step before incineration was assumed [11]. Excess air with 65% relative humidity allowed us to estimate the adiabatic flame temperature and flue gas composition from Equation (4).

$$CH_xO_yN_zS_p + wH_2O + w_vH_2O + E_{xc} \cdot a_{th}(O_2 + 3.76N_2) \rightarrow n_xCO_2 + n_xH_2O + n_xN_2 + n_xSO_2 + n_xO_2, \quad (4)$$

where w_v represents the number of moles associated with the air humidity, while E_{xc}, the excess air considered in the reaction. Note that any change in E_{xc} results in an adjustment of w_v; in [8] allows estimating the energy balance for a steady flow adiabatic combustion process without work interactions. On the other hand, Equation (5) allows estimation of the enthalpy of formation of the MSW [9].

$$\bar{h}_{f_{MSW}} = \overline{LHV} + \sum_{k=p} N_k(\bar{h}_f)_k. \quad (5)$$

In Equation (5), $\bar{h}_{f_{MSW}}$ refers to the enthalpy of formation of MSW, the $\overline{LHV}$ term is the lower calorific value in the molar basis of the solid residue. The terms $(\bar{h}_f)_k$ and N_k are the molar enthalpy of formation and the number of moles of product k, respectively, under complete combustion of MSW.

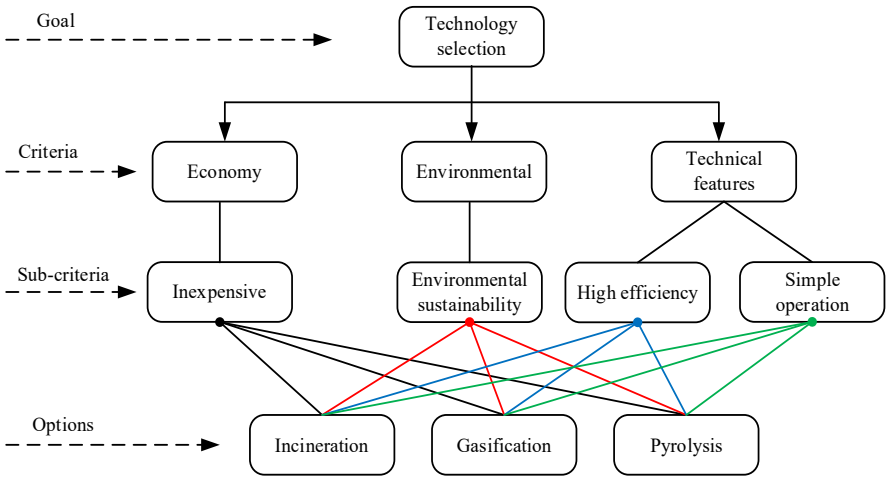

Figure 1. Hierarchical structure to select the thermochemical conversion technology for MSW.

2.4. Rankine cycle description

Figure 2 shows the incineration system and the regenerative Rankine cycle. The combustion chamber (CC100) receives solid waste (WS200) and combustion air (A201) from the preheater (AH100). Water leaves the P101 pump and enters an open feed water heater (OFWH) and then into economizer (ECO100), where preheating it with the energetic contribution of the combustion gases. Preheated water (WF205) enters the superheater (SH100) and splits into WF206 and WF200.

The first one flows into the preheater (AH100) and then to the open feedwater heater (OFWH), and the second one flows to the turbine (T100) to generate mechanical work and then electricity (E200). (WF201) is directed to the condenser (C100) and then to the pump P101 to culminate the cycle. The cooling water (W200) is taken from the outside through the pump P100 and then directed to the condenser. Table 2 shows the operating parameters of the Rankine cycle.

2.5. Thermo-economic cost balance

Equation (6) specifies the cost balance considering the physical representation of the system, and Equation (7) the economic aspects such as the cost flow of the streams entering the system, waste, and branches. In these equations, $A_{(m*n)}$ is the incidence matrix (mathematical representation of the physical system), $\pi_{(n*1)}$ and $\pi_{((n-m)*1)}$ are the thermo-economic costs, $Z_{(m*1)}$ is the fixed cost flow, $\alpha_{(n-m)*n}$ is the economic matrix, and $\phi_{(n-m)}$ is the defined thermo-economic cost vector. The equipment and streams of the system are represented by m and n respectively.

$$A_{(m*n)} * \pi_{(n*1)} + Z_{(m*1)} = 0_{(m*1)}, \quad (6)$$

$$\alpha_{(n-m)*n} * \pi_{((n-m)*1)} - \phi_{(n-m)} = 0_{(n-m)*1}. \quad (7)$$

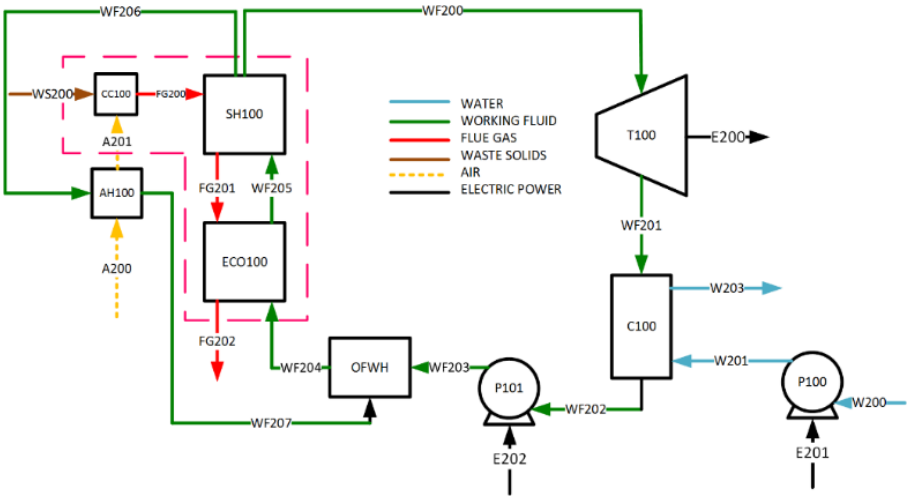

Figure 2. Proposed incineration system and Rankine cycle.

Table 2. Rankine cycle operating parameters.

Parameter	Nomenclature	Value	Units
Working fluid mass flow rate	m_W	2.088	Kg s^{-1}
Flue gas mass flow rate	m_{GB}	10.66	Kg s^{-1}
Heating air mass flow rate	m_A	10	Kg s^{-1}
Cooling water mass flow rate	m_{WF}	16	Kg s^{-1}
Superheater inlet pressure	P_{FG200}	101.325	KPa
Superheater inlet temperature	T_{FG200}	1150	K
Condensing pressure	P_{WF201}	120	KPa
Turbine inlet temperature	T_{WF200}	863	K
Turbine inlet pressure	P_{WF200}	4000	KPa

3. Results

Table 3 shows the proximate and ultimate analysis, and HHV of the MSW considered in this study [7]; in [3,12-15] were used for the proximate and ultimate analyses of the MSW. In the proximate analysis, FC, MV, and A represent fixed carbon, volatile matter, and ash, respectively. Table 3 indicates that polystyrene has the higher HHV of the MSW, while paper wastes showed the lower HHV. The HHV of polystyrene is 57% higher than the paper wastes.

Table 3. Elemental composition on a dry-ash-free basis, proximate analysis on a dry basis, and HHV of the MSW.

MSW	Proximate analysis (%)				Ultimate analysis (%)					HHV* (MJ Kg^{-1})
	FC	MV	M	A	C	H	O	N	S	
Food	16.95	77.31	-	5.74	52.02	7.21	37.40	3.16	0.21	21.88
Plastics	-	-	-	-	82.34	12.41	4.75	0.28	0.22	37.05
Toilet paper	-	-	-	-	50.60	7.94	40.56	0.53	0.37	22.61
Cardboard	8.82	83.96	-	7.22	48.97	6.14	44.52	0.21	0.16	19.53
Paper	-	-	-	-	44.43	8.78	46.31	0.12	0.36	18.36
Wood	18.20	80.81	-	0.99	50.14	6.16	43.50	0.17	0.02	20.26

* Channiwala and Parikh [7].

3.1. Thermochemical conversion technology selected

As shown in Figure 1, incineration, gasification, and pyrolysis were the thermochemical conversion routes assessed in this study. Results obtained is this study showed that the sub-criteria inexpensive has the highest priority, reaching 47%, followed by environmental sustainability (28%), while the sub-criteria high efficiency and simple operation reached 12%. The consistency ratio was 0.07, being the limited value 0.1 for a comparison matrix with four criteria; as shown in Table 4, incineration reached the higher weighting percentage (53%), followed by gasification and pyrolysis, respectively.

Table 4. Priority matrix for the selected technologies.

Options-Criteria	Environmental sustainability	Inexpensive	High efficiency	Simple operation	Weighting
Incineration	0.11	0.71	0.57	0.71	0.53
Gasification	0.63	0.14	0.29	0.14	0.30
Pyrolysis	0.26	0.14	0.14	0.14	0.18
Total	0.28	0.47	0.12	0.12	1.00

3.2. Electric power generation

This study analyses the energy utilization of MSW for electric power generation; for a relative air humidity of 65%, an excess air of 80%, and an MSW mass flow rate of 0.6672 Kg s^{-1}, the maximum temperature reached was 1150 K. The engineering equation solver software (EES) [16] allows calculating entropy and enthalpy. Figure 3(a) compares the exergy flow of the currents of the system proposed by Trindade, *et al.* [17] and those obtained in this work. S1, S2, S3, and S7 correspond to WF200, WF201, WF202, and WF203 in this study. Figure 3(b) shows the maximum relative error obtained between results of this work and those of Trindade, *et al.* [17].

The proposed cycle was simulated using the EES software [16] and validated with the results reported by Trindade, *et al.* [17]. In this study, the power generated by the T100 turbine is 1974 KW and the power consumed by the P100 pump and P101 pump is 2.2 KW and 12 KW, respectively; for the system operating set up, and mass flow of solid waste in the city of Ocaña, Colombia, there is a great potential for electricity generation (1960 KW), which could be viable from an economic point of view.

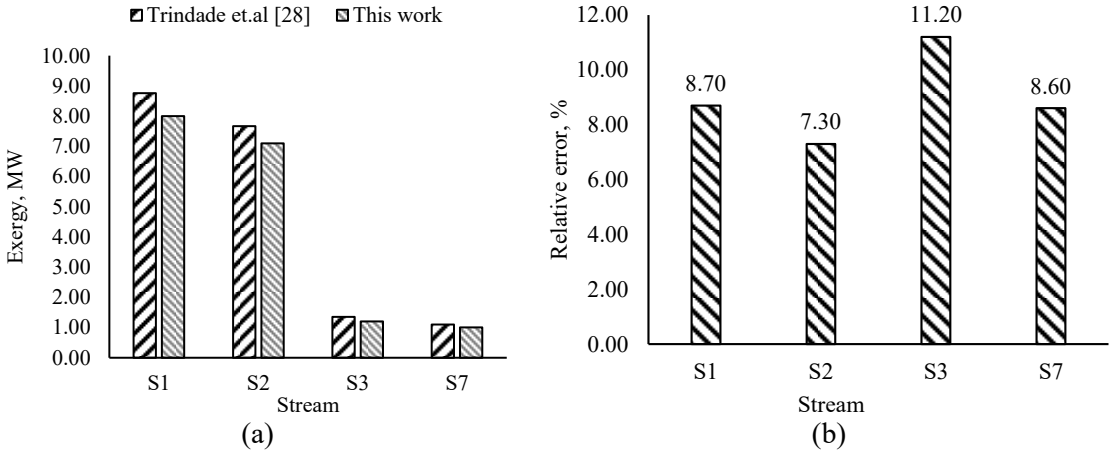

Figure 3. Results validation; (a) exergy of currents; (b) relative error values regarding to Trindade, *et al.* [17].

3.3. Power generation costs

This section shows the results associated with the cost of electricity generation and the payback period of the investment; for this purpose, we use thermo-economic since it allows assigning costs based on the exergy flows of the proposed system streams.

Table 5 shows the total exergy flow of principal streams in the Rankine cycle integrated with the incineration system. Note that the higher exergy flow corresponds to the flow of solid waste corresponding to the system fuel.

Table 5. Total exergy flow of the system streams.

Stream	Exergy flow (KW)	Stream	Exergy flow (KW)	Stream	Exergy flow (KW)
WS200	17179	FG202	-10271	W203	461.6
WF200	3452	W200	2771	WF206	866.3
WF203	3251	WF204	570.2	A200	-718.7

3.4. Thermo-economic cost balance

The thermo-economic costs of all streams are calculated to determine the electrical energy production cost. Figure 4 shows the simplifications used to support the thermo-economic estimations.

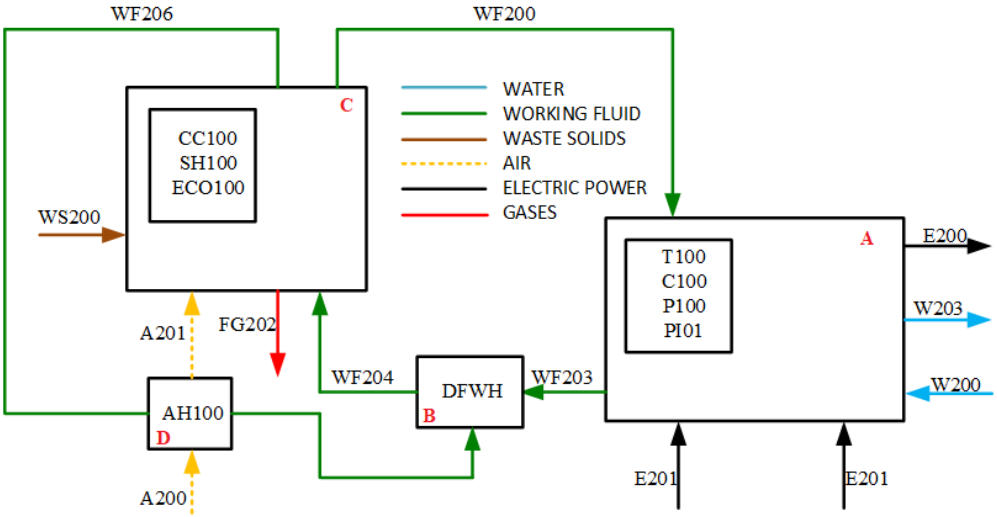

Figure 4. Clustered system for thermo-economic analysis.

To determine, the defined cost vector and purchasing equipment costs (Table 6), the total cost investment is required, assuming a Lang factor of 4.74 [18]. In Table 6, USD represents the American dollar; an annual operating time of 6132 hours was assumed.

Table 6. Purchasing equipment cost (PEC).

Equipment	T100	P100	P101	C100	ECO100	SH100	AH100	Total
Cost (USD)	8322684	2451	5259	41404	17170	6832	8520	914320

Figure 5(a) shows the cost of electricity generation (COP/kWh) for different scenarios of annual maintenance costs. COP represents the Colombian money. For maintenance costs of 2%, 6%, and 10%, the power generation cost is 395 COP/KWh, 4548 COP/KWh, and 505 COP/KWh, respectively.

In Figure 5(b) is shows that for an effective annual interest rates of 5%, 7%, 10%, and 15%, the cost of electricity generation is 284 COP/KWh, 303 COP/KWh, 332 COP/KWh, and 388 COP/KWh, respectively. According to the analysis performed, for interest rates between 7 and 10%, the payback period is 2.5 years.

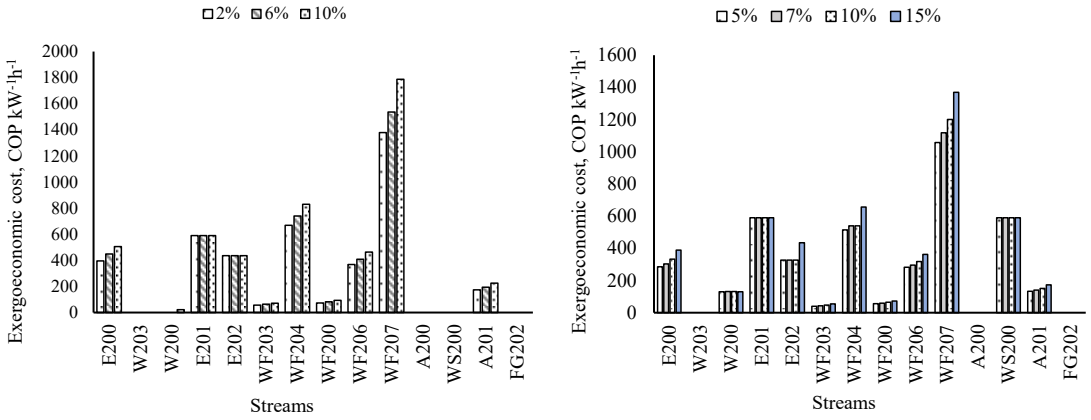

Figure 5. Economic costs obtained in this study; (a) economic costs of currents vs. maintenance costs; (b) Economic costs of streams vs effective annual interest rate.

4. Conclusions

Energy derived from municipal solid wastes through thermochemical conversion processes represents a sustainable route to obtain value-added products while reducing the environmental impact. This work evaluated the power generation using a Rankine cycle with municipal solid wastes incineration. Results show that municipal solid wastes could produce 3480 KW_{th} with a mass flow of 2383 Kg h^{-1}. In addition, exergy and thermo-economic balances indicate the high potential of these feedstocks for electric production.

The analytical hierarchical method shows that incineration is the appropriate technology for the energetic use of solid waste in Ocaña, Colombia. According to economic, environmental, and technical criteria. Incineration obtained a weighting of 57%, followed by gasification with 30% and pyrolysis with 18%.

From the proposed cycle, a net power of 1960 KW was obtained, representing a thermal efficiency of 48.6 %, with generation costs of 300 COP/KWh, 332 COP/KWh, and 388 COP/KWh for effective annual interest rates of 7%, 10%, and 15%, respectively, and a minimum payback period of 2.5 years. The results obtained demonstrate the potential for the use of municipal solid wastes in Ocaña, Colombia.

References

[1] Ibikunle R A, Titiladunayo I F, Akinnuli B O, Dahunsi S O, Olayanju T M A 2019 Estimation of power generation from municipal solid wastes: a case study of Ilorin metropolis, Nigeria *Energy Rep.* **5** 126

[2] Shahnazari A, Rafiee M, Rohani A, Nagar B B, Ebrahiminik M A, Aghkhani M H 2020 Identification of effective factors to select energy recovery technologies from municipal solid waste using multi-criteria decision making (MCDM): a review of thermochemical technologies *Sustain. Energy Technol. Assess.* **40** 100737

[3] Siddiqi M M, Naseer M N, Wahab Y A, Hamizi N A, Badruddin I A, Chowdhury Z Z, Akbarzadeh O, Johan M R, Khan T M Y, Kamangar S 2019 Evaluation of municipal solid wastes based energy potential in urban Pakistan *Processes* **7(11)** 848

[4] Ochoa Giraldo J A 2015 *Formulación de una Propuesta Técnica de una Planta de Aprovechamiento y Valorización de Residuos Sólidos Inorgánicos, Generados en el Casco Urbano del Municipio de Ocaña, Norte de Santander* (Ocaña: Universidad Francisco de Paula Santander)

[5] Noushabadi A S, Dashti A, Ahmadijokani F, Hu J, Mohammadi A H 2021 Estimation of higher heating values (HHVs) of biomass fuels based on ultimate analysis using machine learning techniques and improved equation *Renew. Energ.* **179** 550

[6] Hosseinpour S, Aghbashlo M, Tabatabaei M, Mehrpooya M 2017 Estimation of biomass higher heating value (HHV) based on the proximate analysis by using iterative neural network-adapted partial least squares (INNPLS) *Energy* **138** 473

[7] Channiwala S A, Parikh P P 2002 A unified correlation for estimating HHV of solid, liquid and gaseous fuels *Fuel* **81(8)** 1051

[8] Çengel Y A, Boles M E 2019 *Thermodynamics: An Engineering Approach* (New York: McGraw-Hill)
[9] Melgar A, Pérez J F, Laget H, Horillo A 2007 Thermochemical equilibrium modelling of a gasifying process *Energy Convers. Manag.* **48(1)** 59
[10] Saaty R W 1987 The analytic hierarchy process—what it is and how it is used *Mathematical Modelling* **9(3-5)** 161
[11] Qazi W A, Abushammala M F M 2020 Multi-criteria decision analysis of waste-to-energy technologies *Waste-to-Energy: Multi-Criteria Decision Analysis for Sustainability Assessment and Ranking* ed Ren J (London: Elsevier) chapter 10
[12] Eboh F C, Ahlström P, Richards T 2016 Estimating the specific chemical exergy of municipal solid waste *Energy Sci. Eng.* **4(3)** 217
[13] Baawain M, Al-Mamun A, Omidvarborna H, Al-Amri W 2017 Ultimate composition analysis of municipal solid waste in Muscat *J. Clean. Prod.* **148** 355
[14] Chang Y F, Lin C J, Chyan J M, Chen I M, Chang J E 2007 Multiple regression models for the lower heating value of municipal solid waste in Taiwan *J. Environ. Manage.* **85(4)** 891
[15] Dolgen D, Sarptas H, Alpaslan N, Kucukgul O 2005 Energy potential of municipal solid wastes *Energy Sources* **27(15)** 1483
[16] F-Chart-Software 2018 *Engineering Equation Solver, EES* (Madison: University of Wisconsin)
[17] Trindade A B, Palacio J C E, González A M, Rúa Orozco D J, Lora E E S, Renó M L G, del Olmo O A 2018 Advanced exergy analysis and environmental assessment of the steam cycle of an incineration system of municipal solid waste with energy recovery *Energy Convers. Manag.* **157** 195
[18] Querol E, Gonzalez-Regueral B, Perez-Benedito J L 2013 *Practical Approach to Exergy and Thermoeconomic Analyses of Industrial Processes* (New York: Springer Science & Business Media)